MIKADO

Massimiliano Raggi

AP | AP SOLO | SO | SO DOUBLE | SO SOLO | FL | TA | TA SOLO

Lanterna da appoggio in due dimensioni. La struttura esterna in materiale composito viene finita in bronzo, attraverso le nuove tecniche di verniciatura con polveri di metallo: risulta impossibile dire se è metallo o un altro materiale, l'effetto è quello del bronzo spazzolato. La parte interna della lanterna è in metallo laccato oro, che crea un elegante contrasto. Il vetro rigato da cui esce la luce arricchisce il prodotto.

Collection of "jewel" lamps characterised by the combination of rectangular brass tubes and parallelepipeds in engraved crystal, with two types of workmanship. The apparently random combinations (hence the name Mikado) instead follow a precise and balanced scheme. The LED sources, inserted in the tubes in such a way as to illuminate enhancing the preciousness of the crystal, make Mikado a high-performance decorative product compatible with home automation systems.

SPECIFICHE PRODOTTO / PRODUCT SPECIFICS p2

MIKADO AP p4
MIKADO AP SOLO p5

MIKADO SO p6
MIKADO SO DOUBLE p7
MIKADO SO SOLO p8

MIKADO FL p9
MIKADO TA p10
MIKADO TA SOLO p11

CONTARDI®

STRUTTURA / *FRAME*

Ottone satinato
Satin brass

DIFFUSORE / DIFFUSER

Cristallo trasparente
Transparent crystal

Finitura inciso
Engraved finish

Finitura prismatic
Prismatic finish

CAVO - INTERRUTTORE/ *CABLE - SWITCH*

Tessuto nero
Black fabric

TA / TA SOLO
Pulsante a tre intensità sulla base
Three step push switch on the base
L: 200 cm
L: 78.7"

FL
Pulsante dimmerabile a piede
Foot dimmer switch
L: 30 + 200 cm
L: 11.8" + 78.7"

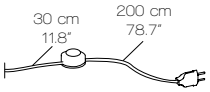

FONTE LUMINOSA / *LIGHT SOURCE*

Custom LED

AP
4 X 5W
Lumen: 2.240
3.000 K; CRI: >90

AP SOLO / SO SOLO
2 X 5W
Lumen: 1.120
3.000 K; CRI: >90

SO / FL
10 X 5W
Lumen: 5.600
3.000 K; CRI: >90

SO DOUBLE
20 X 5W
Lumen: 11.200
3.000 K; CRI: >90

TA
6 X 5W
Lumen: 3.360
3.000 K; CRI: >90

TA SMALL
1 X 5W
Lumen: 500
3.000 K; CRI: >90

DIMMERABILE / DIMMABLE

TA / TA SOLO
Dimmerabile a tre livelli di intensità (100 - 70 - 30%)
Dimmable with three intensity levels (100 - 70 - 30%)
FL
Dimmerabile a piede
Dimmable with foot control
AP / SO
Compatibili con sistemi di controllo remoto
Compatible with remote control systems

CE

Mikado FL, TA e TA SOLO

USA / CABLE - SWITCH

Black cable

TA / TA SOLO
Three step push switch on the base
L: 78.7"

FL
Foot dimmer switch
L: 11.8" + 78.7"

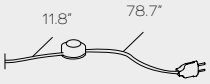

USA / LIGHT SOURCE

Custom LED

AP
4 X 5W
Lumen: 2.240
3.000 K; CRI: >90

AP SOLO / SO SOLO
2 X 5W
Lumen: 1.120
3.000 K; CRI: >90

SO / FL
10 X 5W
Lumen: 5.600
3.000 K; CRI: >90

SO DOUBLE
20 X 5W
Lumen: 11.200
3.000 K; CRI: >90

TA
6 X 5W
Lumen: 3.360
3.000 K; CRI: >90

TA SMALL
1 X 5W
Lumen: 500
3.000 K; CRI: >90

DIMMABLE

TA / TA SOLO
Dimmable with three intensity levels (100 - 70 - 30%)
FL
Dimmable with foot control
AP / SO
Compatible with remote control systems

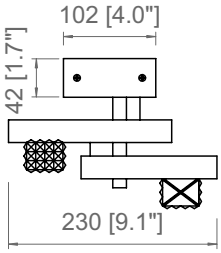

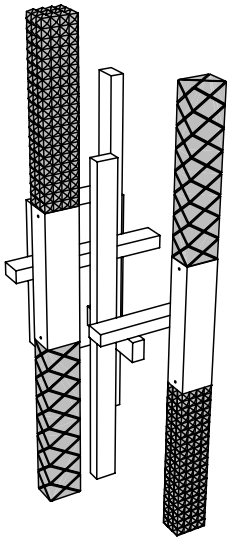

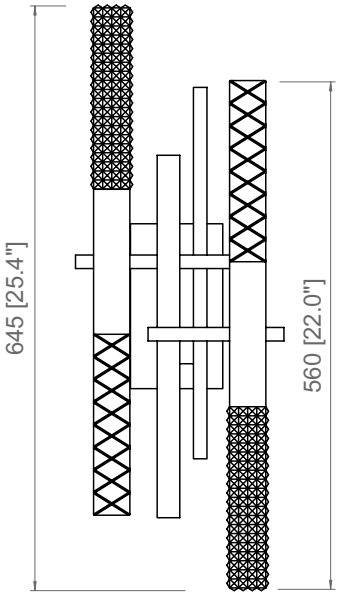

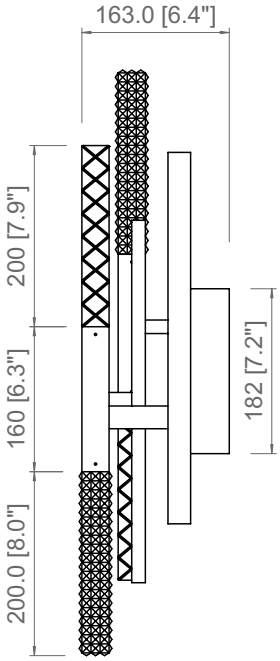

PRODOTTO / PRODUCT	BOX 1
PESO / *WEIGHT* 4 kg / *8.8 lbs*	L: 52 cm / *20.4"* W: 52 cm / *20.4"* H: 32 cm / *12.6"* PESO / *WEIGHT* 5 kg / *11 lbs*

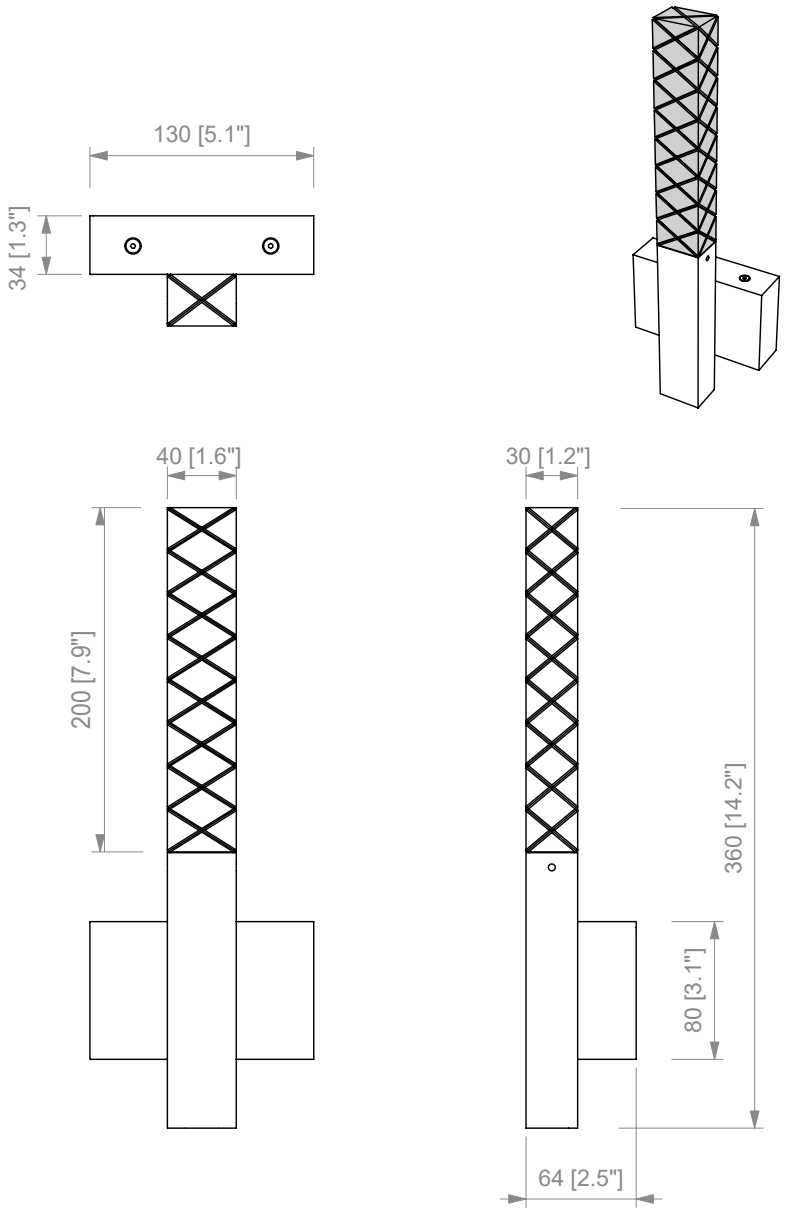

PRODOTTO / PRODUCT	BOX 1
PESO / *WEIGHT* 2 kg / *4.4 lbs*	L: 32 cm / *12.6"* W: 22 cm / *8.6"* H: 13 cm / *5.1"* PESO / *WEIGHT* 3 kg / *6.6 lbs*

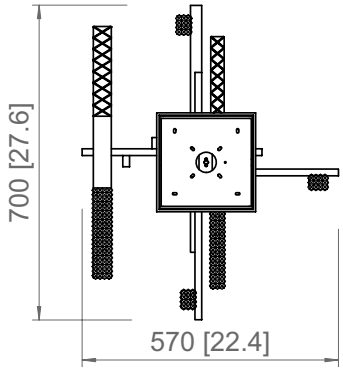

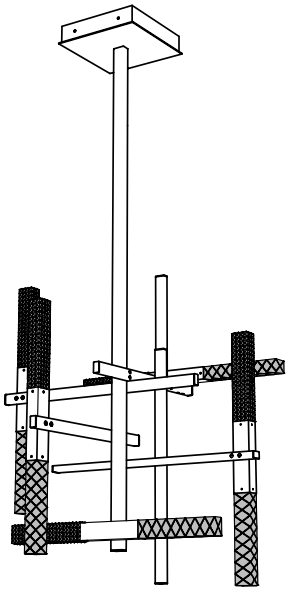

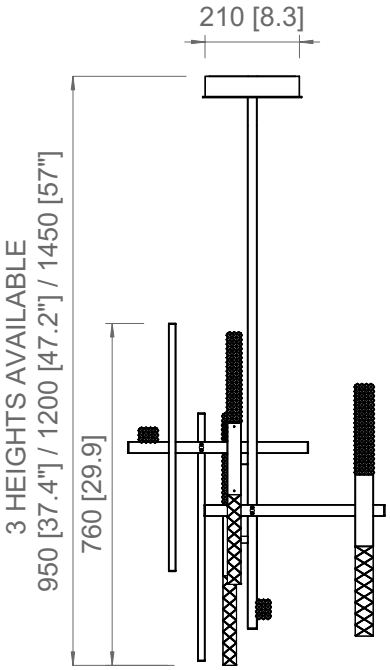

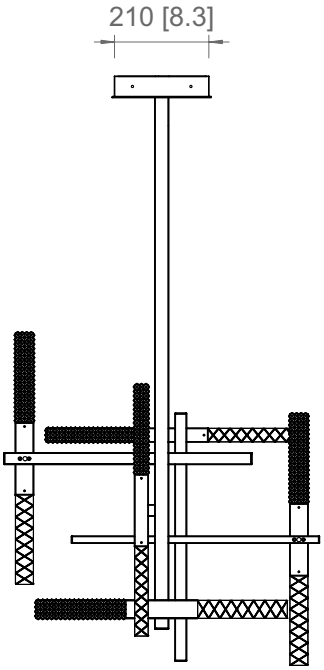

PRODOTTO / PRODUCT	BOX 1	BOX 2
PESO / *WEIGHT* 14 kg / *30.8 lbs*	L: 81 cm / *31.8"* W: 67 cm / *26.3"* H: 102 cm / *40.1"* PESO / *WEIGHT* 12 kg / *26.4 lbs*	L: 43 cm / *16.9"* W: 43 cm / *16.9"* H: 17 cm / *6.7"* PESO / *WEIGHT* 4 kg / *8.8 lbs*

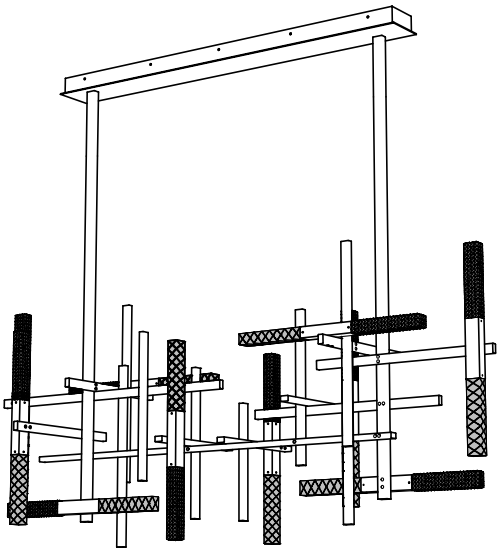

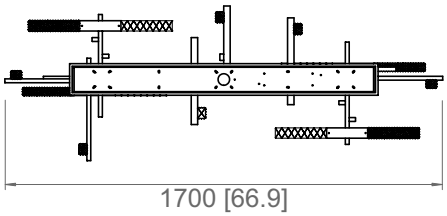

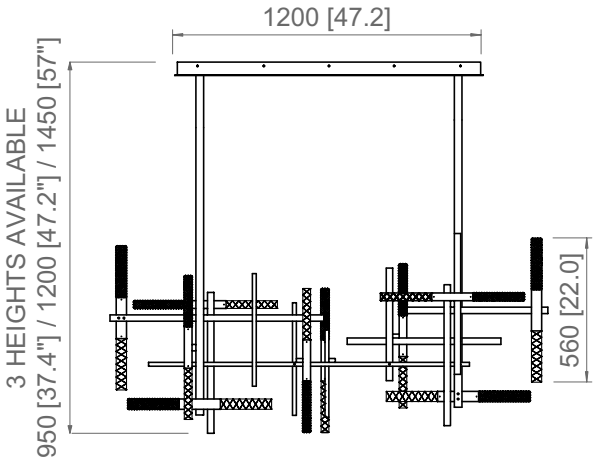

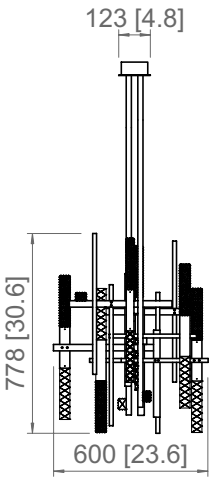

PRODOTTO / PRODUCT	BOX 1	BOX 2
PESO / *WEIGHT* 39 kg / *85.9 lbs*	L: 180 cm / *70.8"* W: 72 cm / *28.3"* H: 150 cm / *59"* PESO / *WEIGHT* 36 kg / *79.3 lbs*	L: 52 cm / 20.4" W: 52 cm / 20.4" H: 32 cm / *12.5"* PESO / *WEIGHT* 8,5 kg / *18.7 lbs*

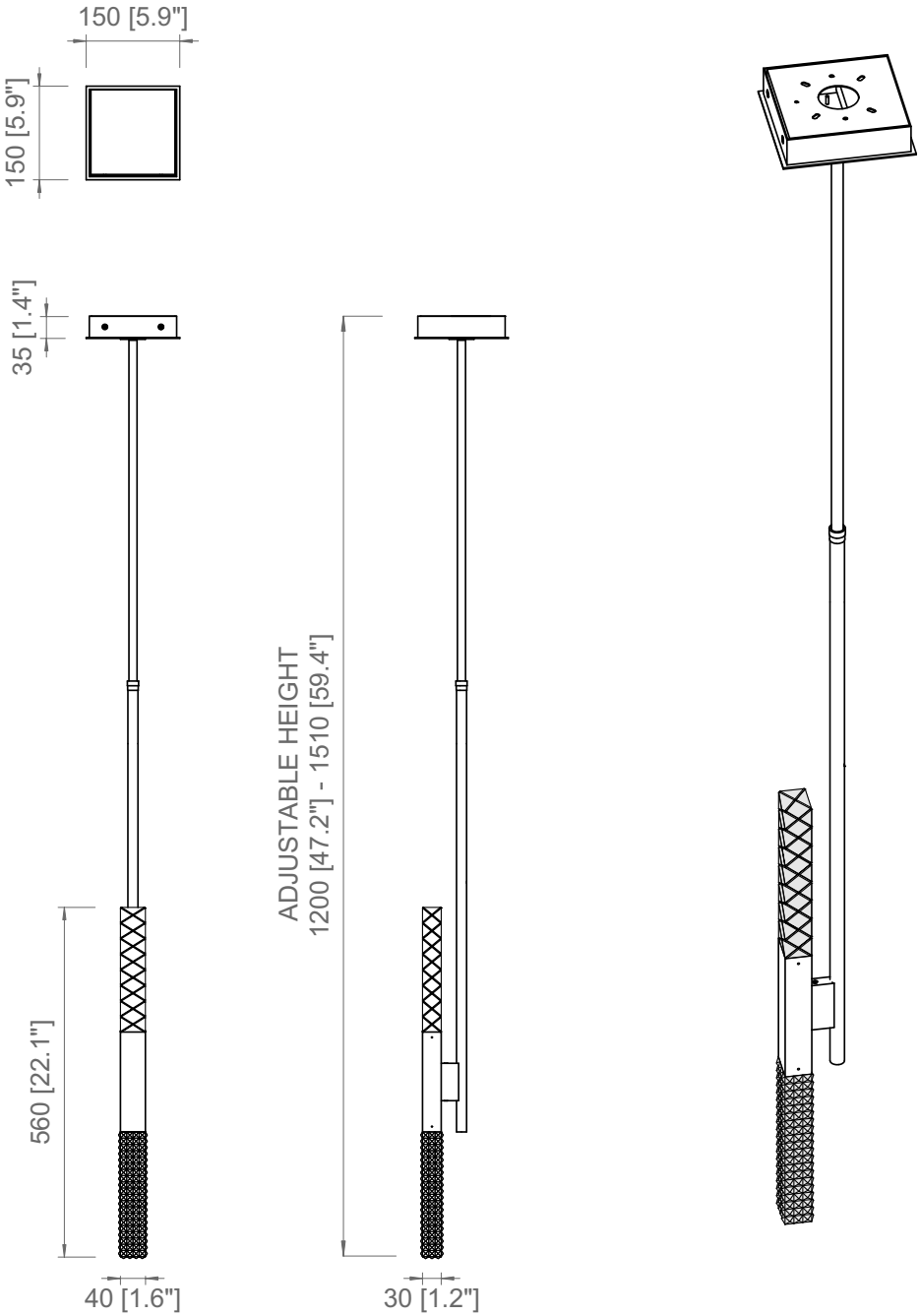

PRODOTTO / PRODUCT	BOX 1
PESO / *WEIGHT* 4 kg / *8.8 lbs*	L: 22 cm / *8.6"* W: 22 cm / *8.6"* H: 125 cm / *49.2"* PESO / *WEIGHT* 5 kg / *11 lbs*

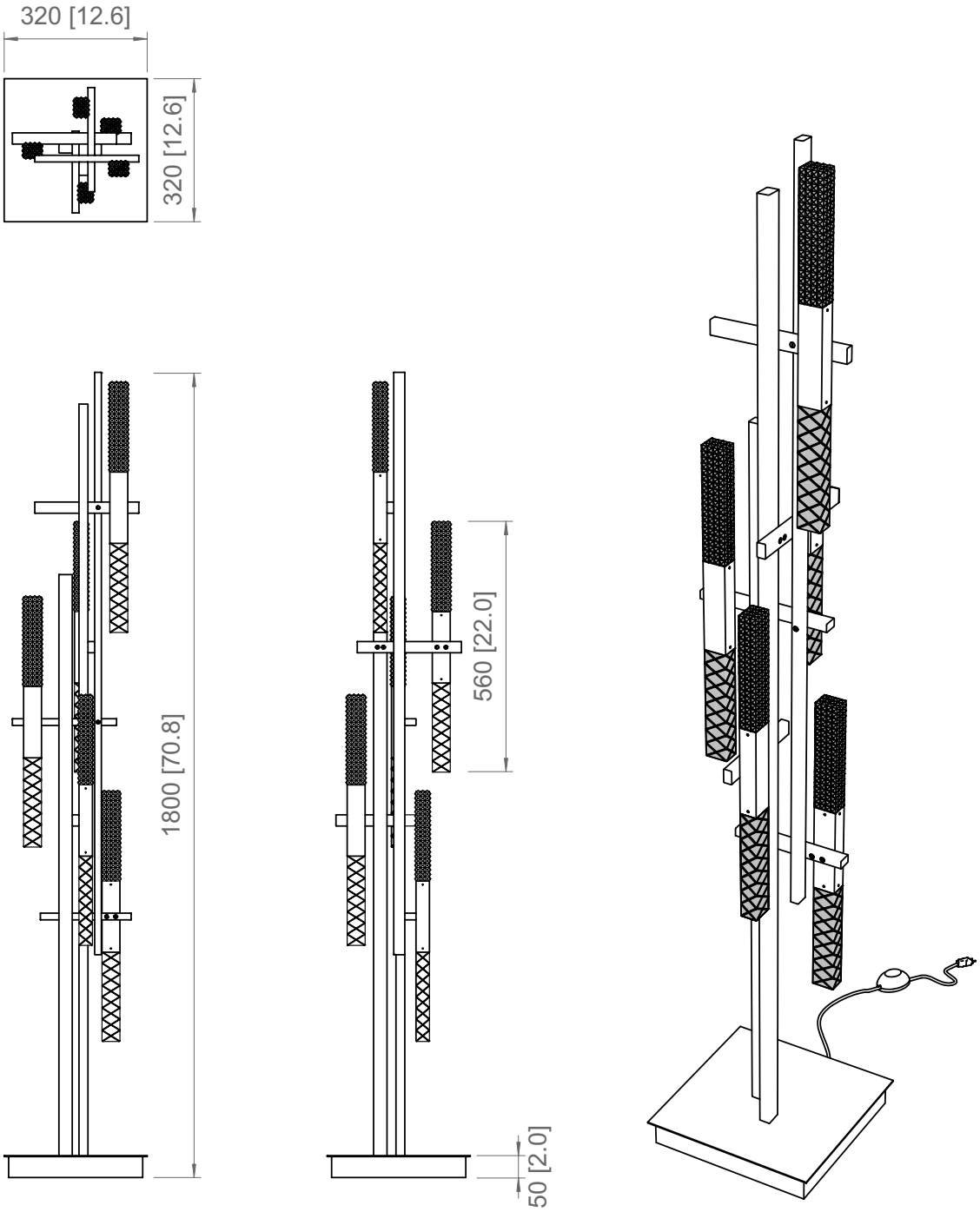

PRODOTTO / PRODUCT	BOX 1
PESO / *WEIGHT* 23 kg / *50.7 lbs*	L: 45 cm / *17.7"* W: 45 cm / *17.7"* H: 192 cm / *75.6"* PESO / *WEIGHT* 25 kg / *55.1 lbs*

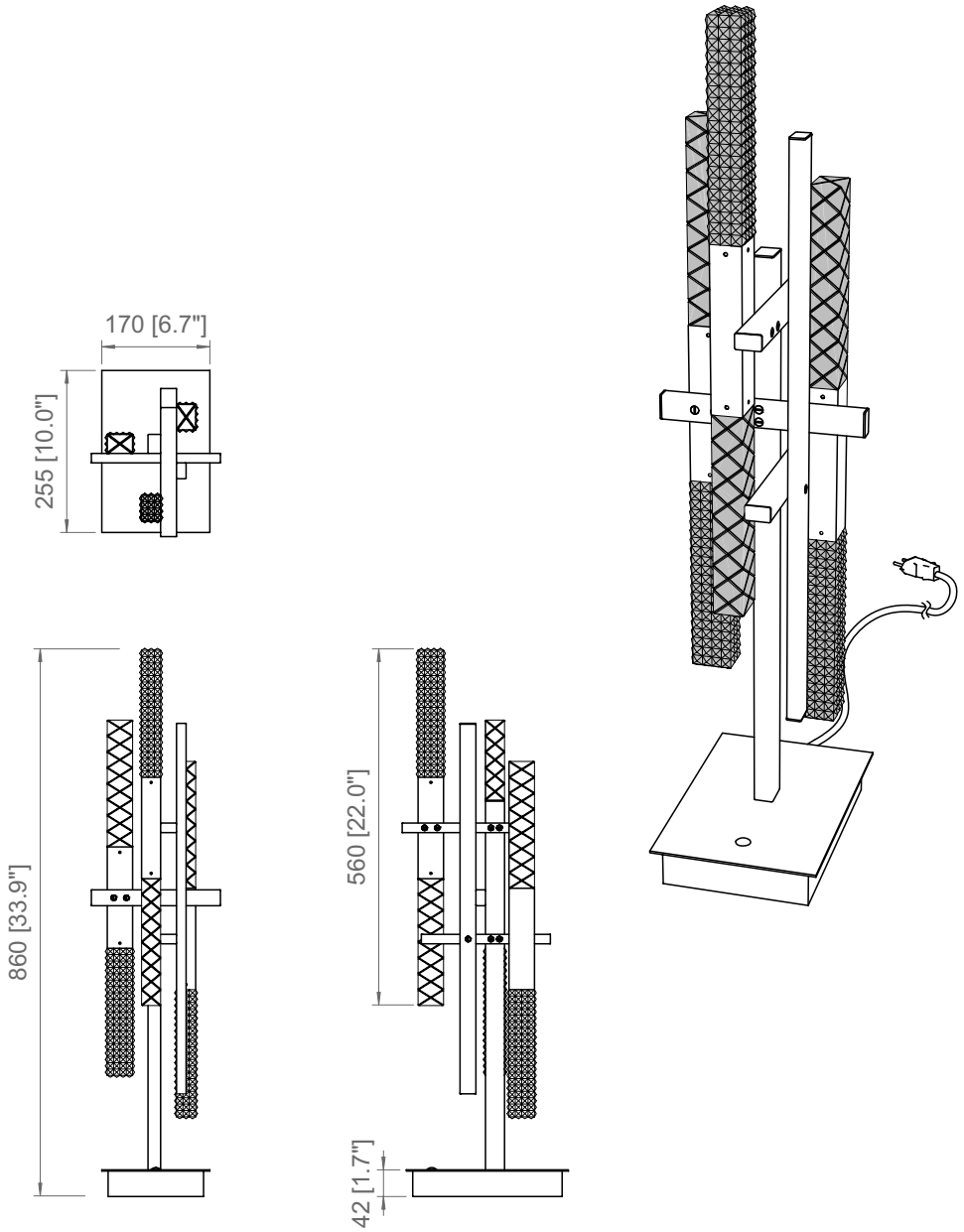

PRODOTTO / PRODUCT	BOX 1
PESO / *WEIGHT* 11 kg / *24.2 lbs*	L: 36 cm / *14.1"* W: 36 cm / *14.1"* H: 89 cm / *35"* PESO / *WEIGHT* 12 kg / *26.4 lbs*

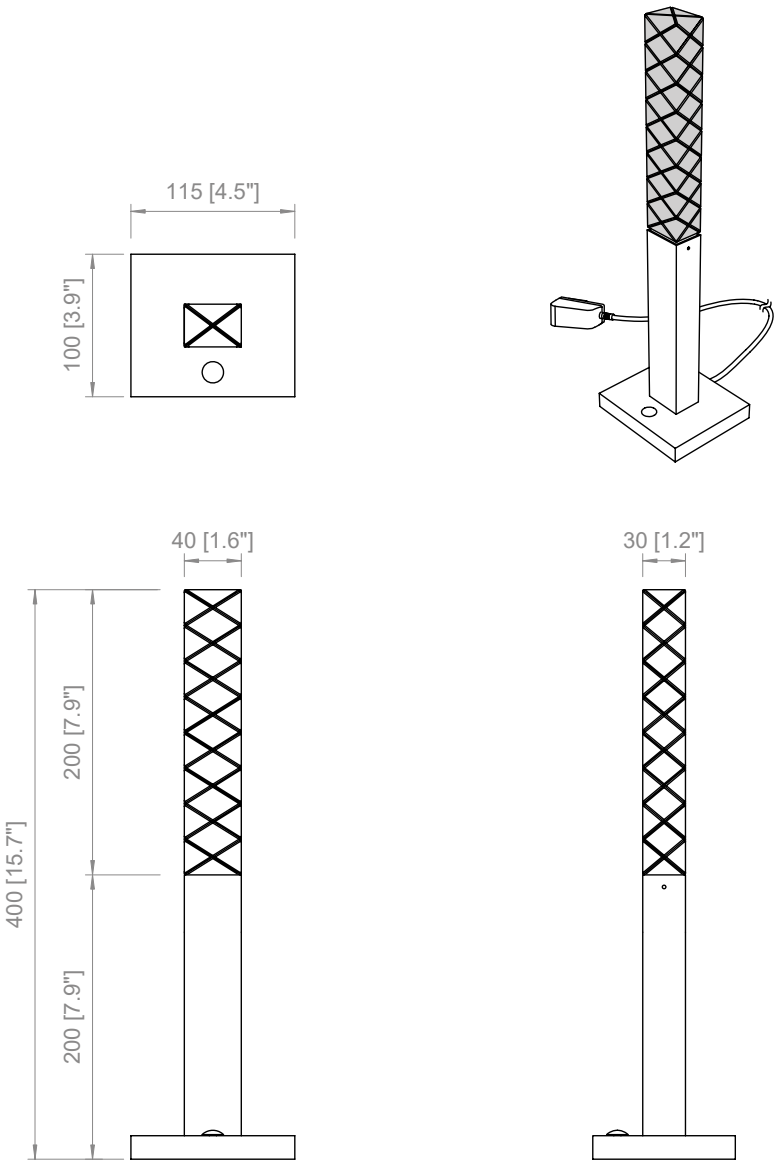

PRODOTTO / PRODUCT	BOX 1
PESO / *WEIGHT* 2 kg / *4.4 lbs*	L: 27 cm / *10.6"* W: 27 cm / *10.6"* H: 30 cm / *11.8"* PESO / *WEIGHT* 3 kg / *6.6 lbs*

Copyright and/or design rights subsist in this drawing. No part of this drawing may be reproduced in any material form (including photocopying or storing in any medium electronic means,
whether or not intentionally and whether or not as part or a larger publication) without the express permission of the copyright owner, Contardi Lighting S.r.l.. Further and without prejudice to the
above, this drawing and all information relating thereto is confidential, and shall not be communicated to a third party without the consent of Contardi lighting srl. Contardi lighting srl asserts
all rights to be identified as the author of the work and otherwise.

WARNING: The doing of any unauthorised act in relation to a copyright work may result in both a civil claim for damages and criminal prosecution.

CONTARDI LIGHTING Srl
ITALY HEADQUARTERS
www.contardi-italia.com / sales@contardi-italia.it

CONTARDI USA Inc
USA BRANCH
www.contardi-usa.com / sales@contardi-usa.com